REV	DATE	MODIFICATION	DRAWN

ELECTRICAL:
1. CONTACT RESISTANCE: 0M OHMS MAX
2. INSULATION RESISTANCE: 100M OHMS @500V DC
3. WITHSTAND VOLTAGE: DC1000V AC700V RMS 60HZ, IMIN
4. CAT.5E PERMANENT LINK: CONFORM TO ANSI/TIA/EIA 568B. 2-10

ENVIRONMENTAL:
1. STORAGE: -40°/ +70°
2. OPERATION: -10°/ +60°

MECHANICAL:
1. UNSHIELDED MATERIAL: PC UL 94-V0
2. IDC MATERIAL: PC
3. TERMINAL: PHOSPHOR BRONZE, TIN GOLD 3U"/6U"/15U"/30U"/50U"
4. RJ45 CONTACT LIFE: 750 TIMES MIN
5. IDN LIFE: 250 TIMES MIN

TYPE:
1. UNSHIELDED CAT.5E KEYSTONE JACK
2. COLOUR: WHITE

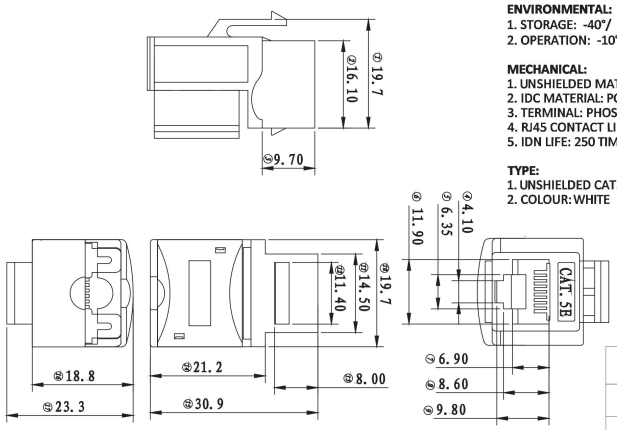

Solarstar Electronics Industrial Co.,Ltd.

		MATERIAL	DWG NO.
X±0.20 .X±0.10 .XX±0.05	X±1° .X±0.5° .XX±0.2°	TITLE	CAT5E UTP Keystone Jack
DRAWN	APPROVAL	confirm	SCALE 1/1 SHEET 1/1
		PROJ.	REV 1